SOTTI SO

Standard colour: white RAL 9016 structural

Type	Width [mm]	Height [mm]	Depth from wall [mm]	Connections spacing [mm]	Connections distance from the wall [mm]	Brackets spacing [mm]	Heating surface [m²]	Weight [kg]	Capacity [dm³]	Power ΔT=50K (75/65/20 °C) [W]	Power ΔT=46K (75/65/24 °C) [W]	Power ΔT=30K (55/45/20 °C) [W]	Electric heater maximum power [W]
	W	H	D	C	B	A							
SO30112004515R01L3	450	1168	67-92	50	34-59	240	1,17	7,5	1,26	536	486	294	-
SO30114004515R01L3	450	1368	67-92	50	34-59	240	2,29	8,8	1,36	629	570	344	-
SO30116004515R01L3	450	1568	67-92	50	34-59	240	1,88	10,0	1,96	725	657	396	-
SO30118004515R01L3	450	1768	67-92	50	34-59	240	3,16	11,3	2,57	822	745	448	-

Finishing and warranty:	Nanoceramic (zirconia coating) + polyester-epoxy lacquer; 5 year warranty;	
Mounting brackets:	brackets in the colour of the radiator are included	
Accesories:	W zestawie 2 sztuki chromowanych wieszaków ręcznikowych	
Valve:	order separately	
Heater :	–	
Working pressure:	6 bars	
Maximum temperature:	95 °C	
Connections:	MM	- inner threads G 1/2 - air-vent plug G1/8 hidden behind
Remarks:	Water inlet on the left or on the right side	

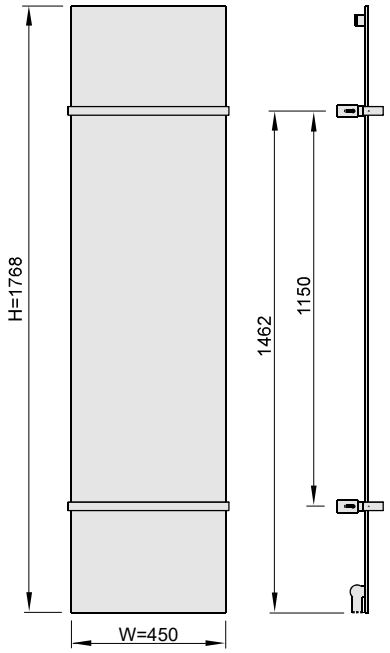

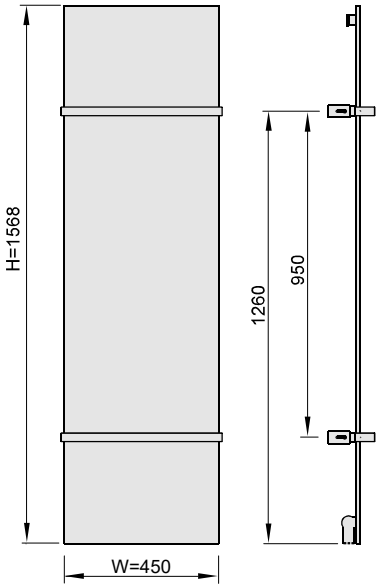

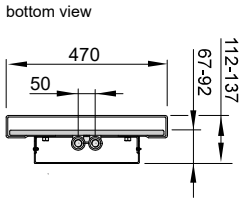

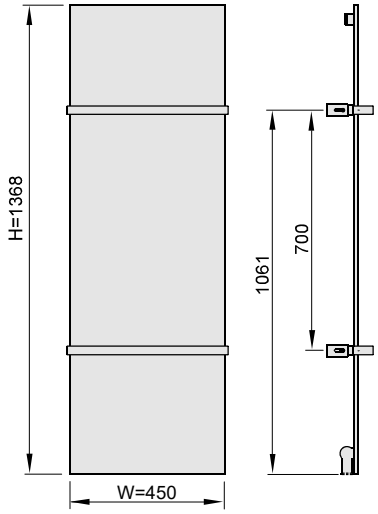

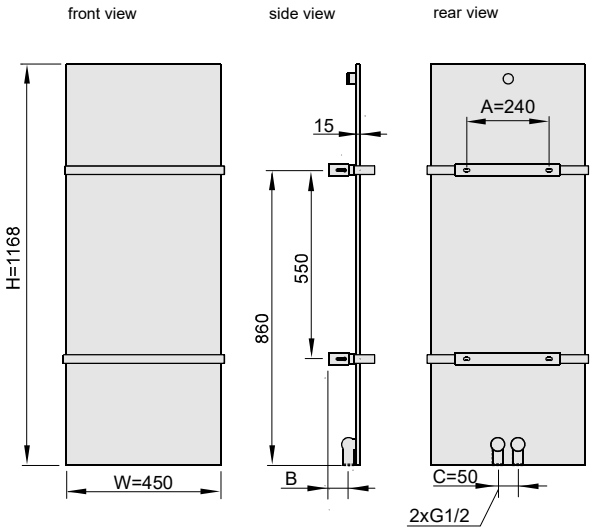

ver. 14_06_2018